Mixergy X
Installation & Servicing instructions

For stainless steel hot water cylinders

2.0 Controller

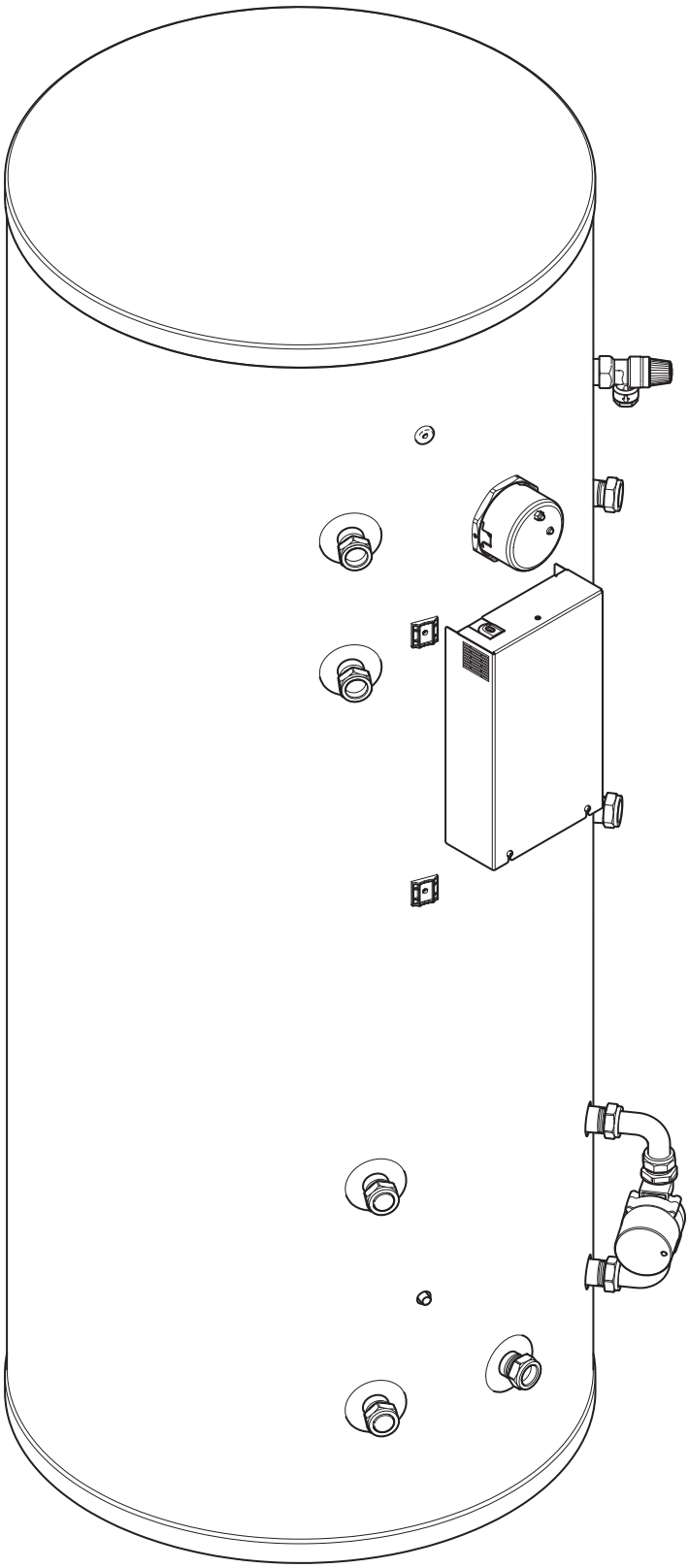

CIPHE
ciphe.org.uk
INDUSTRIAL ASSOCIATE

kiwa

WRAS
APPROVED PRODUCT

hot water association

PLEASE LEAVE WITH HOUSEHOLDER

Failure to install and maintain this system in accordance with these instructions will invalidate the manufacturer's warranty.

mixergy®

Contents

1.0 Cylinder details - MX number 5

2.0 Technical data 5

3.0 Safety 6

4.0 Performance 7

5.0 Additional components 9

6.0 Design notes 10

7.0 Schematic: Indirect 11

8.0 Schematic: Direct 12

9.0 Hydraulic schematics 13

9.1 Direct unvented 13

9.2 Indirect unvented 13

10.0 Installation: general guidelines 14

10.1 Positioning of the cylinder 14

10.2 Unvented installations 15

10.3 Pipework and cold water inlet control group 15

10.4 Fitting a drain valve 15

10.5 Positioning the tundish 16

10.6 Checking the pump and T&P relief valve 16

10.7 Fitting the expansion vessel 16

11.0 Discharge pipework 17

11.1 Discharge pipes from safety devices 17

11.2 Tundish 17

11.3 Typical discharge pipe arrangement 17

11.4 Sizing of discharge pipe D2 for common temperature relief valve outlet sizes 18

Contents

11.5 Discharge pipe D2 18

11.6 Termination of discharge pipe 19

12.0 Installation: electrical 20

12.1 Accessing the controller 20

12.2 Fitting the gauge 20

12.3 General guidelines 21

12.4 Strain relief 21

12.5 Indirect units and electrical wiring 21

12.6 Wiring diagram - Indirect 22

12.7 Wiring diagram - Direct 22

13.0 Installation: connectivity 24

13.1 Connectivity 24

13.2 Supporting a homeowner or resident at set up 24

14.0 Commissioning 25

14.1 Access the controller 26

14.2 Connect peripherals 26

14.3 Power and check status 27

14.4 Changing heat sources 28

14.5 Self-test troubleshooting 28

14.6 Replace lid 28

14.7 Commissioning checklist 29

15.0 Problem solving 31

15.1 Overheated water 31

15.2 Water discharge 31

15.3 Electrical fault 31

Contents

15.4 Connectivity issues 31

15.5 Expansion vessel check and re-charging 31

15.6 Safety valves 31

15.7 Fault code table 32

15.8 No PWR ON LED 33

15.9 STAT LED on/stuck on 33

16.0 Draining the cylinder 33

16.1 Flushing the cylinder 33

17.0 Replacement parts 33

18.0 Guide to safe isolation 35

19.0 Servicing and maintenance 36

19.1 Annual service checks 36

20.2 Disassociating an account 36

20.0 Service record 37

1.0 Cylinder details - MX number

Your cylinder MX number can be found on the label placed on the front of the cylinder.

For detailed guidance on how a Mixergy cylinder operates and how to optimise system performance, visit **support.mixergy.co.uk**

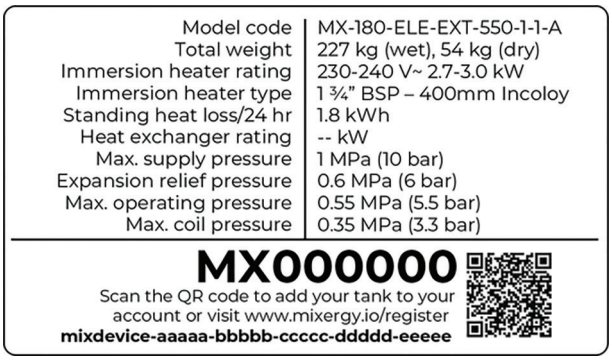

Model code	MX-180-ELE-EXT-550-1-1-A
Total weight	227 kg (wet), 54 kg (dry)
Immersion heater rating	230-240 V~ 2.7-3.0 kW
Immersion heater type	1 ¾" BSP – 400mm Incoloy
Standing heat loss/24 hr	1.8 kWh
Heat exchanger rating	-- kW
Max. supply pressure	1 MPa (10 bar)
Expansion relief pressure	0.6 MPa (6 bar)
Max. operating pressure	0.55 MPa (5.5 bar)
Max. coil pressure	0.35 MPa (3.3 bar)

MX000000

Scan the QR code to add your tank to your account or visit www.mixergy.io/register

mixdevice-aaaaa-bbbbb-ccccc-ddddd-eeeee

Fig. 1

2.0 Technical data

Max. supply pressure to pressure reducing valve	10 bar
Operating pressure	3 bar
Expansion vessel charge pressure	3 bar
Expansion relief valve setting	6 bar
P&T relief valve setting (pressure)	7 bar
P&T relief valve setting (temperature)	90 °C
Thermostat safety cut-out temperature	80 °C
Adjustable temperature range (digital)	50 - 65 °C
Coil max. working pressure (indirect)	3.5 bar
Immersion heater(s) rating	230-240 V~ 2.7-3.0 kW
Immersion heater(s) specification	EN 60335-2-73
Immersion heater(s) type	356 mm Incoloy

3.0 Safety

This equipment must be connected to a protective earthing (PE) conductor.

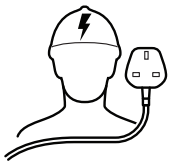

This equipment is designed for connection to single phase supplies with the neutral conductor at earth potential – category TN or TT. This equipment is not designed for use with live and neutral connections reversed or where the neutral conductor is not at earth potential (IT supplies).

This device must be connected via a 16A MCB protected supply.

Always disconnect the device from the supply before removing or replacing the cover. This device has been manufactured in accordance with current safety standards. However, incorrect operation or misuse may result in:

- Injury or death to the operator or third parties.
- Damage to the device and other property of the operator.
- Incorrect operation of the device.

All persons involved in commissioning, maintaining, and servicing the device must:

- Be suitably qualified and competent.
- Have knowledge of and experience in dealing with electrical installations.
- Read and follow these operating instructions carefully.

Unvented hot water cylinders must not be used with solid fuel boilers as the energy source. All models are factory fitted / supplied with immersion heaters that have built-in thermal cut-outs. Heaters without thermal cut-outs must not be fitted. All unvented installations must be fitted with a pressure reducing valve (supplied) and P&T relief valve (fitted). These must not be removed or used for any other purposes than what they are designed for.

4.0 Performance

Direct

Specification	120L	150L	180L	210L	250L	300L
Product Code	MX-120-ELE-550	MX-150-ELE-550	MX-180-ELE-550	MX-210-ELE-550	MX-250-ELE-550	MX-300-ELE-550
Nominal Capacity (L)	120	150	180	210	250	300
ErP Rating	B	B	B	B	C	C
Insulation Thickness (mm)	50	50	50	50	50	50
Connection Size/ Type	22mm comp	22mm comp	22mm comp	22mm comp	22mm comp	22mm comp
Immersion Heater Rating (kW)	3	3	3	3	3	3
Height (mm)	1117	1117	1305	1493	1743	1989
Diameter (mm)	550	550	550	550	550	550
Weight Empty (kg)	24.2	26.4	30.2	33.6	37.6	42
Weight Full (kg)	140.7	173.2	205.2	239.4	280.2	326
Standing Heat Loss (kWh/24h)	0.86	0.91	0.96	1.01	1.34	1.68
Standing Heat Loss (W)	35.83	37.92	40.00	42.08	55.83	70.00
Min. Reheat Time 15–65°C	44 mins	44 mins	44 mins	44 mins	44 mins	44 mins
70% Charge Reheat Time 15–65°C	98 mins	123 mins	147 mins	172 mins	205 mins	245 mins
100% Charge Reheat Time 15–65°C	140 mins	176 mins	210 mins	246 mins	293 mins	350 mins

Direct Slimline

Specification	120L	150L	180L	210L
Product Code	MX-120-ELE-475	MX-150-ELE-475	MX-180-ELE-475	MX-210-ELE-475
Nominal Capacity (L)	120	150	180	210
ErP Rating	B	B	B	B
Insulation Thickness (mm)	50	50	50	50
Connection Size/ Type	22mm comp	22mm comp	22mm comp	22mm comp
Immersion Heater Rating (kW)	3	3	3	3
Height (mm)	1247	1518	1790	1962
Diameter (mm)	475	475	475	475
Weight Empty (kg)	25	26.2	32.4	35.4
Weight Full (kg)	143	173	208.4	231.4
Standing Heat Loss (kWh/24h)	1.25	1.42	1.51	1.58
Standing Heat Loss (W)	52.08	59.17	62.92	65.83
Min. Reheat Time 15–65°C	32 mins	32 mins	32 mins	32 mins
70% Charge Reheat Time 15–65°C	98 mins	123 mins	147 mins	172 mins
100% Charge Reheat Time 15–65°C	140 mins	176 mins	210 mins	246 mins

4.0 Performance

Indirect

Specification	150L	180L	210L	250L	300L
Product Code	MX-150-IND-550	MX-180-IND-550	MX-210-IND-550	MX-250-IND-550	MX-300-IND-550
Nominal Capacity (L)	150	180	210	250	300
ErP Rating	B	B	B	C	C
Insulation Thickness (mm)	50	50	50	50	50
Connection Size/Type	22mm comp	22mm comp	22mm comp	22mm comp	22mm comp
Immersion Heater Rating (kW)	3	3	3	3	3
Height (mm)	1117	1305	1493	1743	1989
Diameter (mm)	550	550	550	550	550
Weight Empty (kg)	28.2	32.2	35.2	39.8	44.6
Weight Full (kg)	178.2	212.2	245.2	289.8	344.6
Coil Rating (kW)	18.3	19.4	19.9	20.7	23.6
BRE Appendix Q Standing Heat Loss (kWh/24h)	0.91	0.96	1.01	1.34	1.68
Standing Heat Loss (kWh/24h)	1.42	1.58	1.74	1.94	2.16
Standing Heat Loss (W)	59.17	65.83	72.50	80.83	90.00
Min. Reheat Time 15–65°C	11 mins	11 mins	12 mins	12 mins	12 mins
25% Charge Reheat Time 15–65°C	11 mins	11 mins	12 mins	12 mins	12 mins
70% Charge Reheat Time 15–65°C	20 mins	22 mins	26 mins	30 mins	31 mins
100% Charge Reheat Time 15–65°C	29 mins	31 mins	37 mins	42 mins	44 mins

Indirect Slimline

Specification	120L	150L	180L	210L
Product Code	MX-120-IND-475	MX-150-IND-475	MX-180-IND-475	MX-210-IND-475
Nominal Capacity (L)	120	150	180	210
ErP Rating	B	C	C	C
Insulation Thickness (mm)	50	50	50	50
Connection Size/Type	22mm comp	22mm comp	22mm comp	22mm comp
Immersion Heater Rating (kW)	3	3	3	3
Height (mm)	1247	1518	1790	1962
Diameter (mm)	475	475	475	475
Weight Empty (kg)	26.6	30.4	34.8	37
Weight Full (kg)	146.6	180.4	214.8	247
Coil Rating (kW)	17.8	18.3	19.4	19.9
BRE Appendix Q Standing Heat Loss (kWh/24h)	1.25	1.42	1.51	1.58
Standing Heat Loss (kWh/24h)	1.36	1.6	1.82	1.98
Standing Heat Loss (W)	56.67	66.67	75.83	82.50
Min. Reheat Time 15–65°C	11 mins	11 mins	11 mins	11 mins
70% Charge Reheat Time 15–65°C	13 mins	15 mins	17 mins	20 mins
100% Charge Reheat Time 15–65°C	19 mins	21 mins	24 mins	29 mins

5.0 Additional components

- Monobloc cold water inlet control group including pressure reducing valve, check valve, pressure and temperature relief valve and expansion relief valve (unvented only)

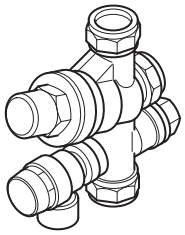

- Tundish (unvented only)

- Expansion vessel including mounting bracket

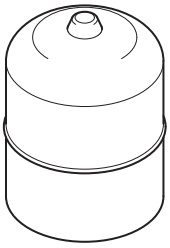

- 3 kW immersion heater(s) 1.3/4" BSP (factory fitted)

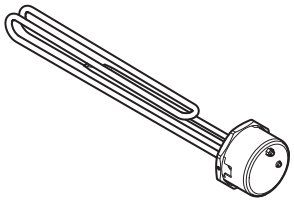

- 2-port diverter valve V4043H1056 (indirect only)

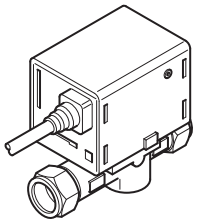

- WIFI dongle TL-WN823N

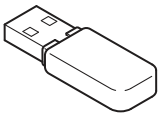

Fig. 2

- Ethernet cable

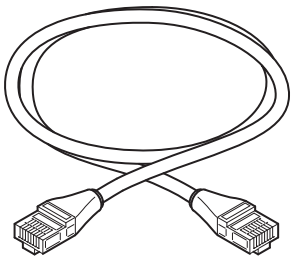

- User guide

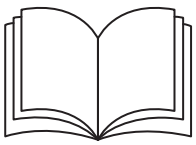

- Gauge

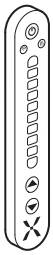

Plate heat exchanger assembly:
Optional extra for heat pumps.

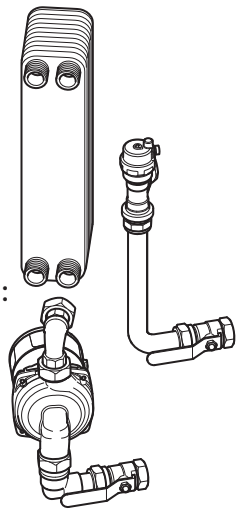

Fig. 3

6.0 Design notes

The Mixergy cylinder is currently available in two variations:

- **Direct** - provides hot water heated by electricity and is designed primarily for use with off peak/time of use tariffs.
- **Indirect** - provides hot water either by electricity or an internal primary coil which is designed for use with gas or oil fired boilers.

In addition, Mixergy cylinders can be fitted with the following options:

- PV switch to allow compatibility with third party PV diverters.
- Factory fitted PV diverter.
- Heat pump exchanger module for use with heat pumps.

Unvented hot water cylinders must not be used with solid fuel boilers as the energy source.

All models are factory fitted / supplied with immersion heaters that have built-in thermal cut-outs. Immersion heaters without thermal cut-outs must not be fitted.

All unvented installations must be fitted with a pressure reducing valve (supplied) and P&T relief valve (fitted). These must not be removed or used for any other purposes than what they are designed for.

The unit should be handled with care in order to avoid damage.
It should be stored upright in a dry place.

7.0 Schematic: Indirect

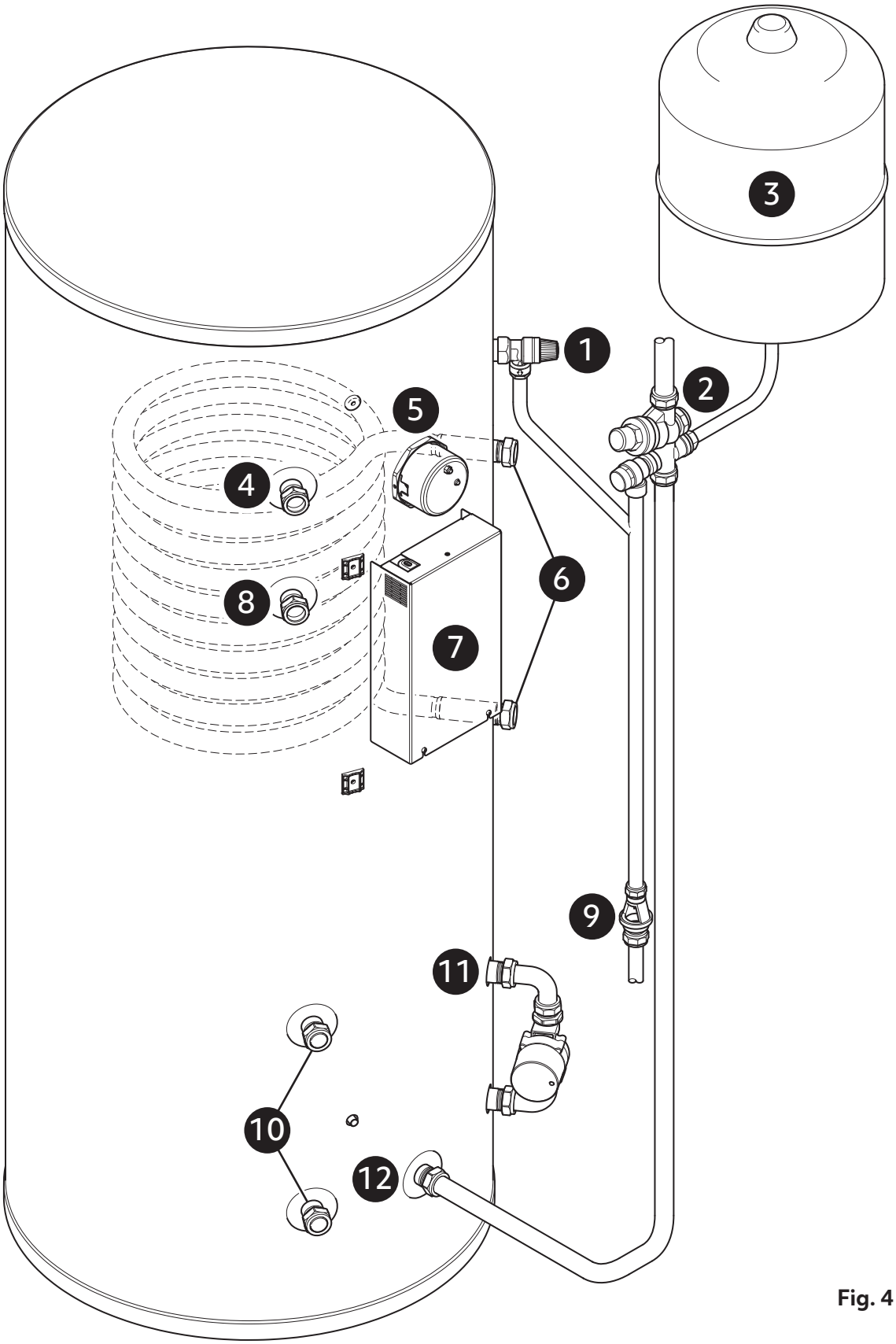

Fig. 4

1. T&P relief valve
2. Inlet control monobloc
3. Expansion vessel
4. Hot water outlet
5. Primary immersion
6. Primary coil
7. Controller
8. Secondary return (210L, 250L, 300L only)
9. Tundish and discharge pipework
10. Heat pump ready ports (Cap off if not used)
11. Pump assembly
12. Cold inlet

8.0 Schematic: Direct

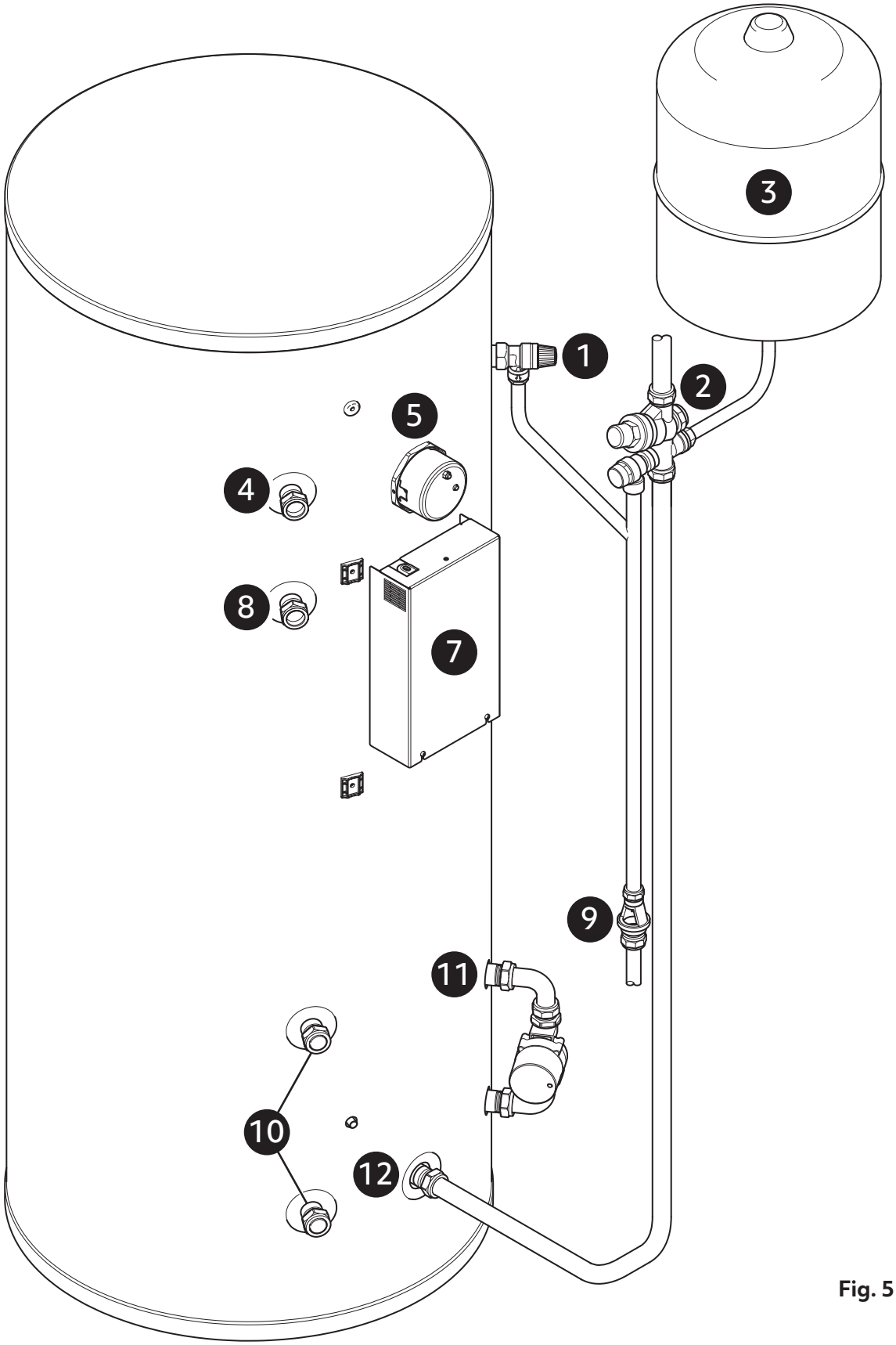

Fig. 5

1. T&P relief valve
2. Inlet control monobloc
3. Expansion vessel
4. Hot water outlet
5. Primary immersion
6. N/A
7. Controller
8. Secondary return (210L, 250L, 300L only)
9. Tundish and discharge pipework
10. Heat pump ready ports (Cap off if not used)
11. Pump assembly
12. Cold inlet

9.0 Hydraulic schematics

9.1 Direct unvented

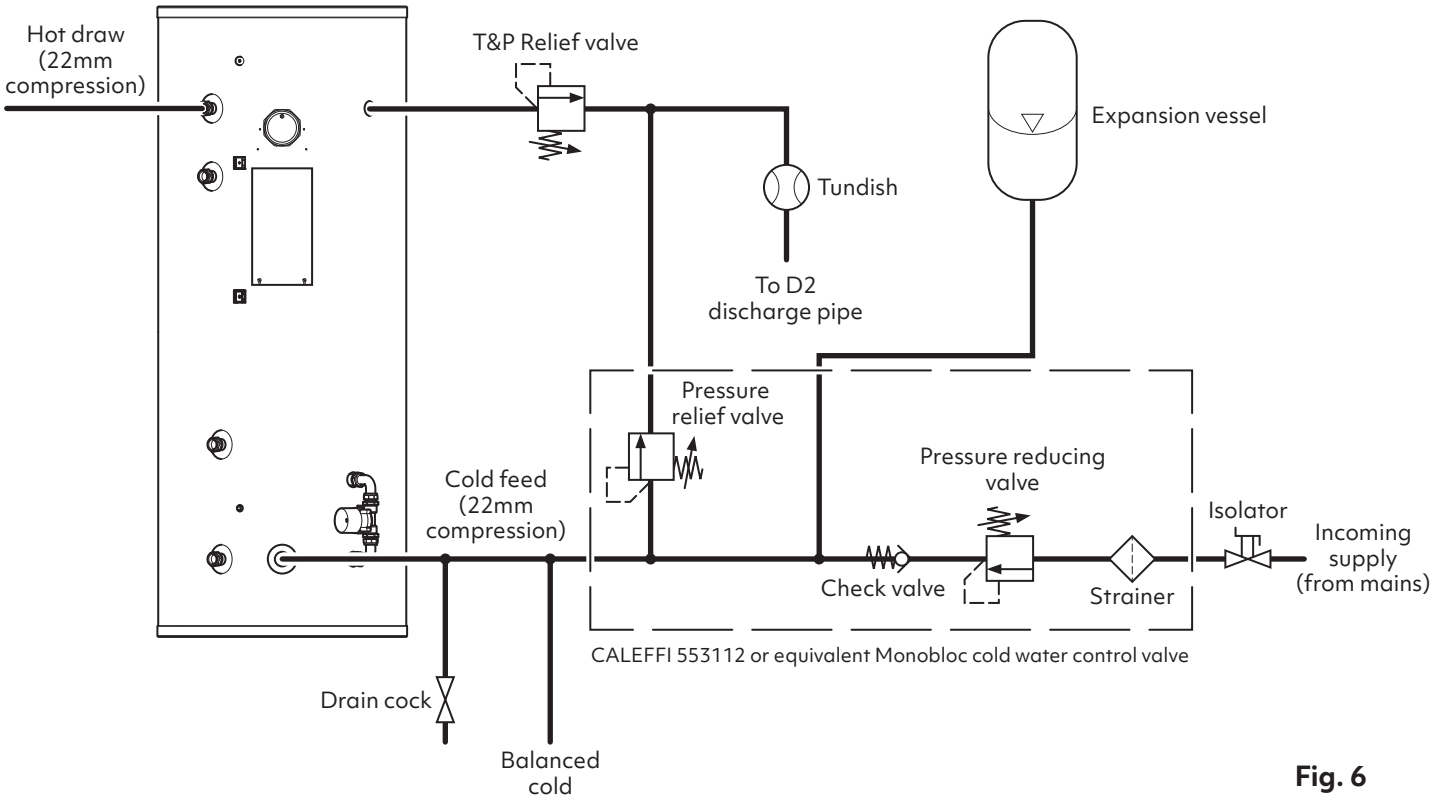

Fig. 6

9.2 Indirect unvented

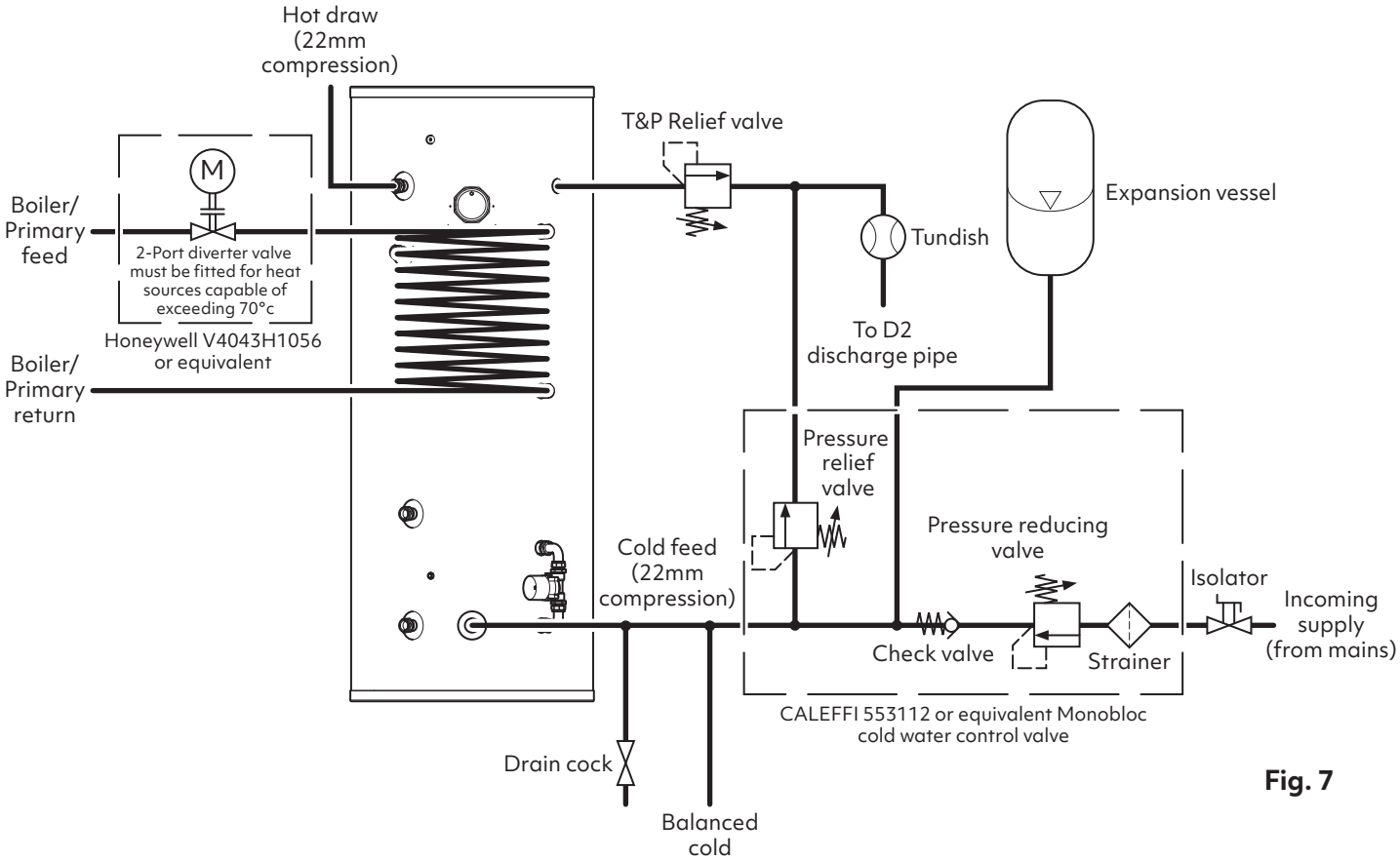

Fig. 7

10.0 Installation: general guidelines

In the case of an unvented installation, this product should only be installed by a "competent operative" i.e. the installer must have attended a recognised course in unvented hot water systems.

The installation area should be able to cope with the weight, incoming pipes and discharge pipe when full.

10.1 Positioning of the cylinder

Position of the cylinder should suit the installation; all connections should be to the front for ease of access.

Ensure suitable space is left for access for repair and/or replacement of immersions and valves etc.

Ensure at-least 100mm of vertical clearance above the cylinder.

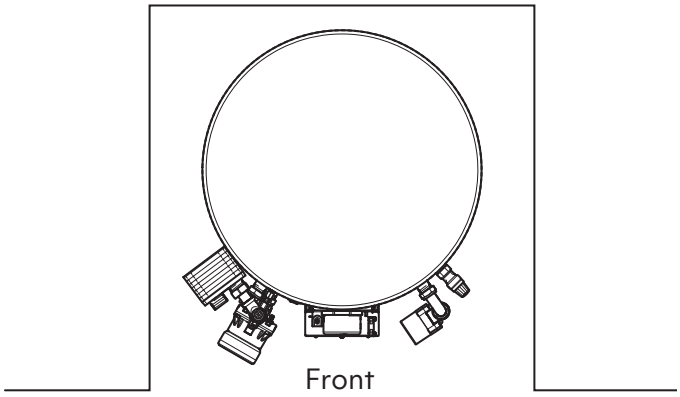

Fig. 8

Mixergy X

Model	120L	150L	180L	210L	250L	300L
Height	986mm	1166mm	1346mm	1526mm	1766mm	2066mm
Diameter	582mm	582mm	582mm	582mm	582mm	582mm
Weight empty	35kg	38kg	42kg	45kg	51kg	55kg
Weight full*	155kg	188kg	212kg	255kg	301kg	355kg

Mixergy X Slimline

Model	120L	150L	180L	210L
Height	1250mm	1440mm	1690mm	2000mm
Diameter	479mm	479mm	479mm	479mm
Weight empty	33kg	37kg	41kg	45kg
Weight full*	151kg	184kg	208kg	242kg

10.0 Installation: general guidelines

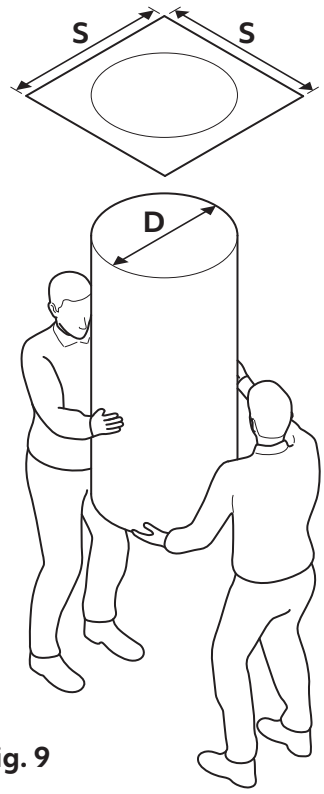

Fig. 9

* Add 5kg to the full cylinder weight for cylinders with an external heat exchanger fitted.

Ensure that any apertures (such as loft hatches) that the cylinder must pass through, meet the minimum space requirement S.

Nominal diameter D	Space requirement S
470-480mm	550mm
550-582mm	700mm
700-720mm	850mm

10.2 Unvented installations

In the case of an unvented installation, installers should ensure incoming mains pressure is less than 10 bar and at-least 1 bar with a minimum flow rate of 10 L/min.

10.3 Pipework and cold water inlet control group

The unit should be piped in with a nominal 22mm pipe to ensure adequate flow rate. The unit is supplied with a monobloc pressure reducing valve that has a set pressure of 3 bar. The valve also consists of a serviceable strainer, non-return valve, expansion relief valve, connection for an expansion vessel and balanced cold feed supply. We would strongly recommend fitting an isolating valve (not supplied) prior to the monobloc valve for ease of maintenance at a later date. Under no circumstances should an isolating valve be fitted between the expansion valve and the storage cylinder.

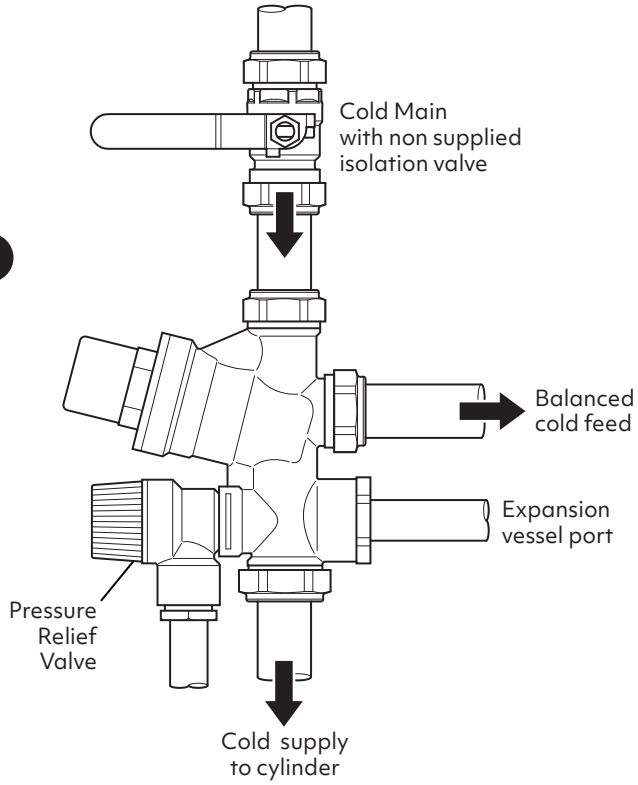

Fig. 10

10.4 Fitting a drain valve

Please ensure that a drain valve is fitted to the lowest part of the pipework installation.

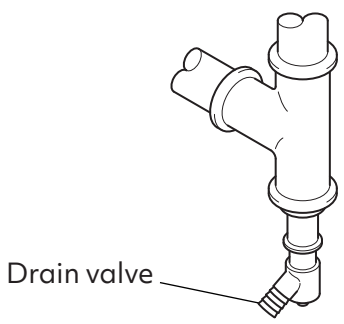

Fig. 11

10.0 Installation: general guidelines

10.5 Positioning the tundish

The tundish, which shows visible discharge from the relief valves, is to be in a prominent, visible and safe position away from any electrical devices. See 11.1 Discharge pipes from safety devices on page 17.

10.6 Checking the pump and T&P relief valve

The temperature and pressure relief valve is set at 7 bar and 90°C. Both the pump and T&P valve are factory fitted and sealed prior to dispatch. Whilst we endeavour to make sure there are no leaks from these seals, we would advise checking the connection as the valve/ pump may have been disrupted in transit.

10.7 Fitting the expansion vessel

The expansion vessel should be checked and if required charged at 3.0 bar. The vessel should be mounted securely to the wall or sufficient support with the fixing kit supplied. The connection should be made between the vessel and monobloc kit.

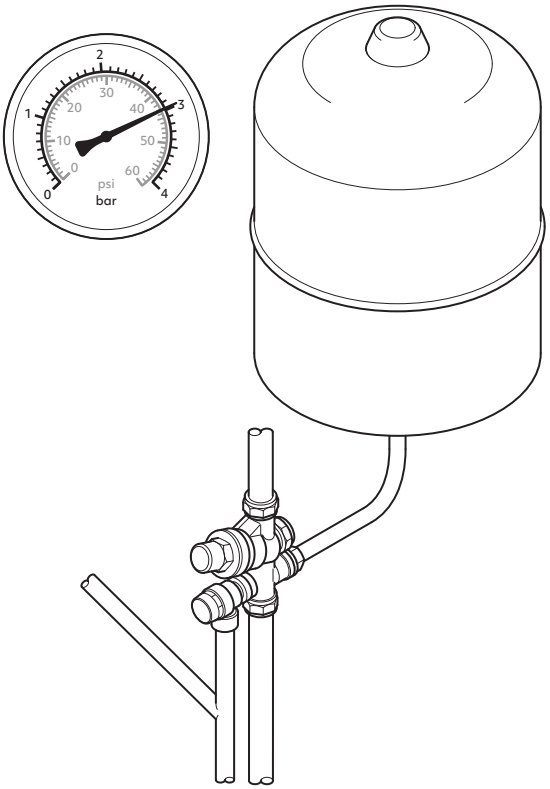

The relief valves are only to be used for relief discharge purposes. No valves should be fitted between the relief valves and the cylinder.

Fig. 12

11.0 Discharge pipework

11.1 Discharge pipes from safety devices

- Safety devices such as temperature relief valves or combined temperature and pressure relief valves should discharge either directly or by way of a manifold via a short length of metal pipe (D1) to a tundish (Fig. 14).
- The diameter of discharge pipe (D1) should be not less than the nominal outlet size of the safety device, e.g. temperature relief valve.
- Where a manifold is used it should be sized to accept and discharge the total discharge from the discharge pipes connected to it.
- Where valves other than a temperature and pressure relief valve from a single unvented hot water system discharge by way of the same manifold that is used by the safety devices, the manifold should be factory fitted as part of the hot water storage system unit or package.

11.2 Tundish

- The tundish should be vertical, located in the same space as the unvented hot water storage system and be fitted as close as possible to, and lower than, the safety device, with no more than 600mm of pipe between the valve outlet and the tundish. Note: to comply with the Water Supply (Water Fittings) Regulations, the tundish should incorporate a suitable air gap.
- Any discharge should be visible at the tundish. In addition, where discharges from safety devices may not be apparent, e.g. in dwellings occupied by people with impaired vision or mobility, consideration should be given to the installation of a suitable safety device to warn when discharge takes place, e.g. electronically operated.

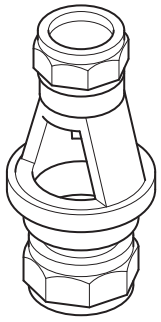

Fig. 13

11.3 Typical discharge pipe arrangement

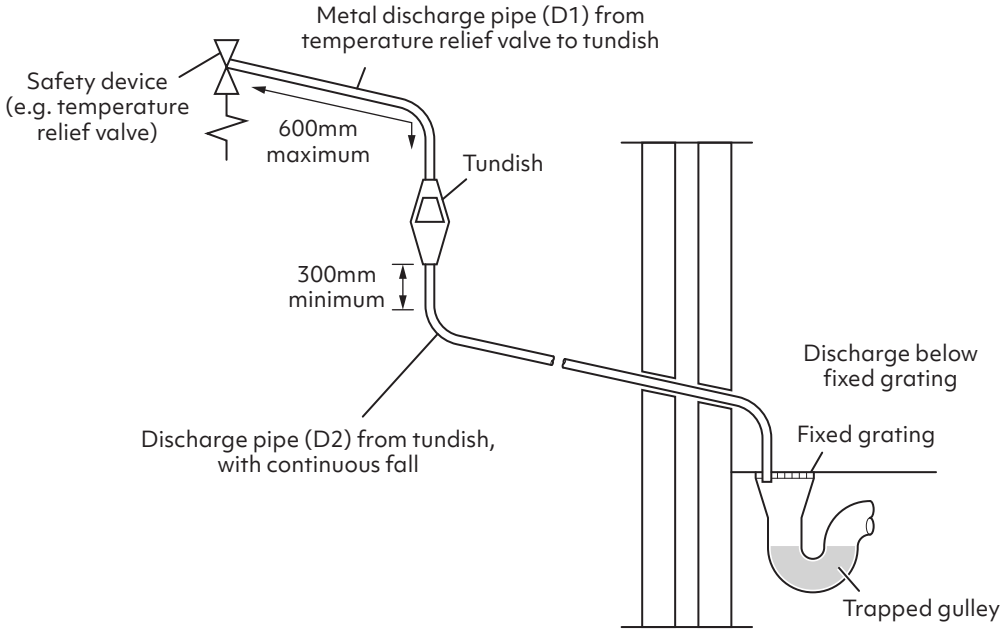

Fig. 14

11.0 Discharge pipework

11.4 Sizing of copper discharge pipe D2 for common temperature relief valve outlet sizes

Valve outlet size	Minimum size of discharge pipe D1	Minimum size of discharge pipe D2 from tundish	Maximum resistance allowed, expressed as a length of straight pipe	Resistance created by each elbow or bend
G 1/2"	15mm	22mm	< 9m	0.8m
		28mm	<18m	1.0m
		35mm	<27m	1.4m
G 3/4"	22mm	28mm	<9m	1.0m
		35mm	<18m	1.4m
		42mm	<27m	1.7m

11.5 Discharge pipe D2

- The discharge pipe (D2) from the tundish should have a vertical section of pipe at least 300mm long below the tundish before any elbows or bends in the pipework. It should be installed with a continuous fall of at least 1 in 200 (Fig. 14).

- The discharge pipe (D2) should be made of metal or other material that has been demonstrated to be capable of safely withstanding temperatures of the water discharged and is clearly and permanently marked to identify the product and performance standard (e.g. as specified in the relevant part of BS 7291-1:2006.)

- The discharge pipe (D2) should be at least one pipe size larger than the nominal outlet size of the safety device unless its total equivalent hydraulic resistance exceeds that of a straight pipe 9m long, i.e. for discharge pipes between 9m and 18m the equivalent resistance length should be at least two sizes larger than the nominal outlet size of the safety device; between 18 and 27m at least 3 sizes larger, and so on; bends must be taken into account in calculating the flow resistance.

- Where a single common discharge pipe serves more than one system, it should be at least one pipe size larger than the largest individual discharge pipe (D2) to be connected.

An alternative approach for sizing discharge pipes would be to follow Annex D, section D.2 of BS 6700:2006 + A1:2009 Specification for design, installation, testing and maintenance of services supplying water for domestic use within buildings and their curtilages.

11.0 Discharge pipework

- The discharge pipe should not be connected to a soil discharge stack unless it can be demonstrated that the soil discharge stack is capable of safely withstanding the temperatures of the water discharged, in which case, it should contain a mechanical seal, not incorporating a water trap, which allows water into the branch pipe without allowing foul air from the drain to be ventilated through the tundish.

- If plastic pipes are used as branch pipes carrying discharge from a safety device, they should be either polybutylene (PB) or cross-linked polyethylene (PE-X) complying with national standards such as Class S of BS 7291-2:2006 or Class S of BS 7291-3:2000 respectively; and be continuously marked with a warning that no sanitary appliances should be connected to the pipe.

- Where pipes cannot be connected to the stack it may be possible to route a dedicated pipe alongside or in close proximity to the discharge stack.

Plastic pipes should be joined and assembled with fittings appropriate to the circumstances in which they are used as set out in BS EN ISO 1043-1:2002.

11.6 Termination of discharge pipe

The discharge pipe (D2) from the tundish should terminate in a safe place where there is no risk to persons in the vicinity of the discharge.

Examples of acceptable discharge arrangements are:

- To a trapped gully with the end of the pipe below a fixed grating and above the water seal.

- Downward discharges at low level; i.e. up to 100mm above external surfaces such as car parks, hard standings, grassed areas etc. are acceptable providing that a wire cage or similar guard is positioned to prevent contact, whilst maintaining visibility.

- Discharges at high level: e.g. into a metal hopper and metal downpipe with the end of the discharge pipe clearly visible or onto a roof capable of withstanding high temperature discharges of water and 3m from any plastic guttering system that would collect such discharges.

12.0 Installation: electrical

ENSURE ALL ELECTRICAL SUPPLIES ARE SWITCHED OFF BEFORE MAKING ANY CONNECTION TO THE UNIT.

ELECTRICAL INSTALLATION MUST BE CARRIED OUT BY COMPETENT ELECTRICIAN AND BE IN ACCORDANCE WITH THE LATEST I.E.T. REGULATIONS

12.1 Accessing the controller

ENSURE ALL ELECTRICAL SUPPLIES ARE SWITCHED OFF BEFORE REMOVING OR REPLACING THE CONTROLLER LID.

Access to the electronics can be made by loosening the two screws at the bottom of the controller and lifting up on the lid (Fig. 15).

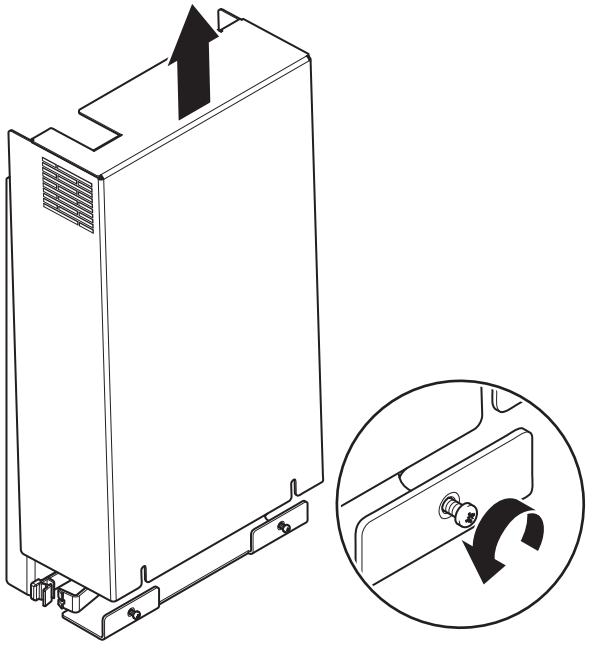

Fig. 15

12.2 Fitting the gauge

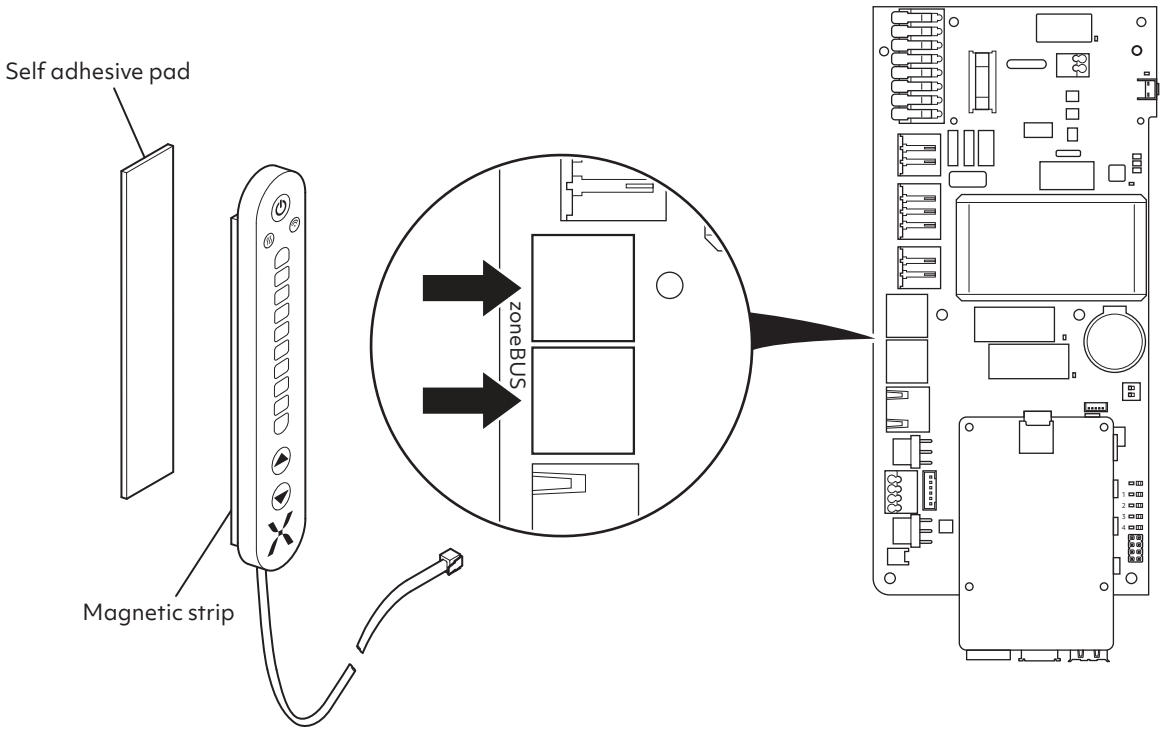

Fig. 16

12.0 Installation: electrical

The gauge has a magnetic backing strip to attach directly to the cylinder, or by using the self adhesive pad can be installed outside of the cylinder cupboard for easy user access.

If required, the cable can be extended by using a RJ11 extension cable (available from Mixergy).

Remove the controller lid (Fig. 15). Insert the connector into either of the zoneBUS ports in the controller (Fig. 16).

12.3 General guidelines

All high voltage connections to this unit are made to spring clamp terminals. Cables should be stripped back 10mm for insertion into these terminals. It is recommended to ensure that the protective earth conductor is kept at least 10mm longer than all other terminated conductors in the cable. No more than 55mm of outer insulation should be removed. Terminals can be accessed by lifting up the orange levers. Cables must be appropriately sized according to latest I.E.T regulations.

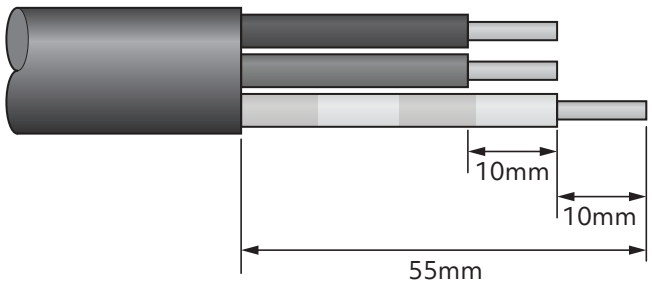

Fig. 17

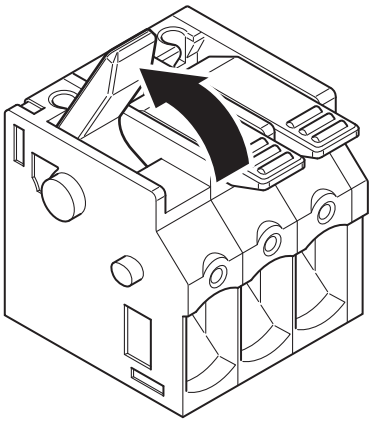

Fig. 18

12.4 Strain relief

Screwed strain relief is provided for all high voltage connections. A PZ1 screwdriver is required to tighten the strain relief. Low voltage cables should be routed through the support pillars to provide strain relief.

12.5 Indirect units and electrical wiring

On indirect units, where a coil is fitted to the cylinder, the supplied two port motorized zone valve must be fitted when the indirect source is capable of exceeding 70°C in accordance with the instruction details supplied for the appropriate installation. Maximum working pressure of the coils is 3.5 Bar. All electrical wiring to electronics, zone valve and immersion heaters must be earthed and to current IEE Wiring Regulations.

12.6 Wiring diagram - Indirect

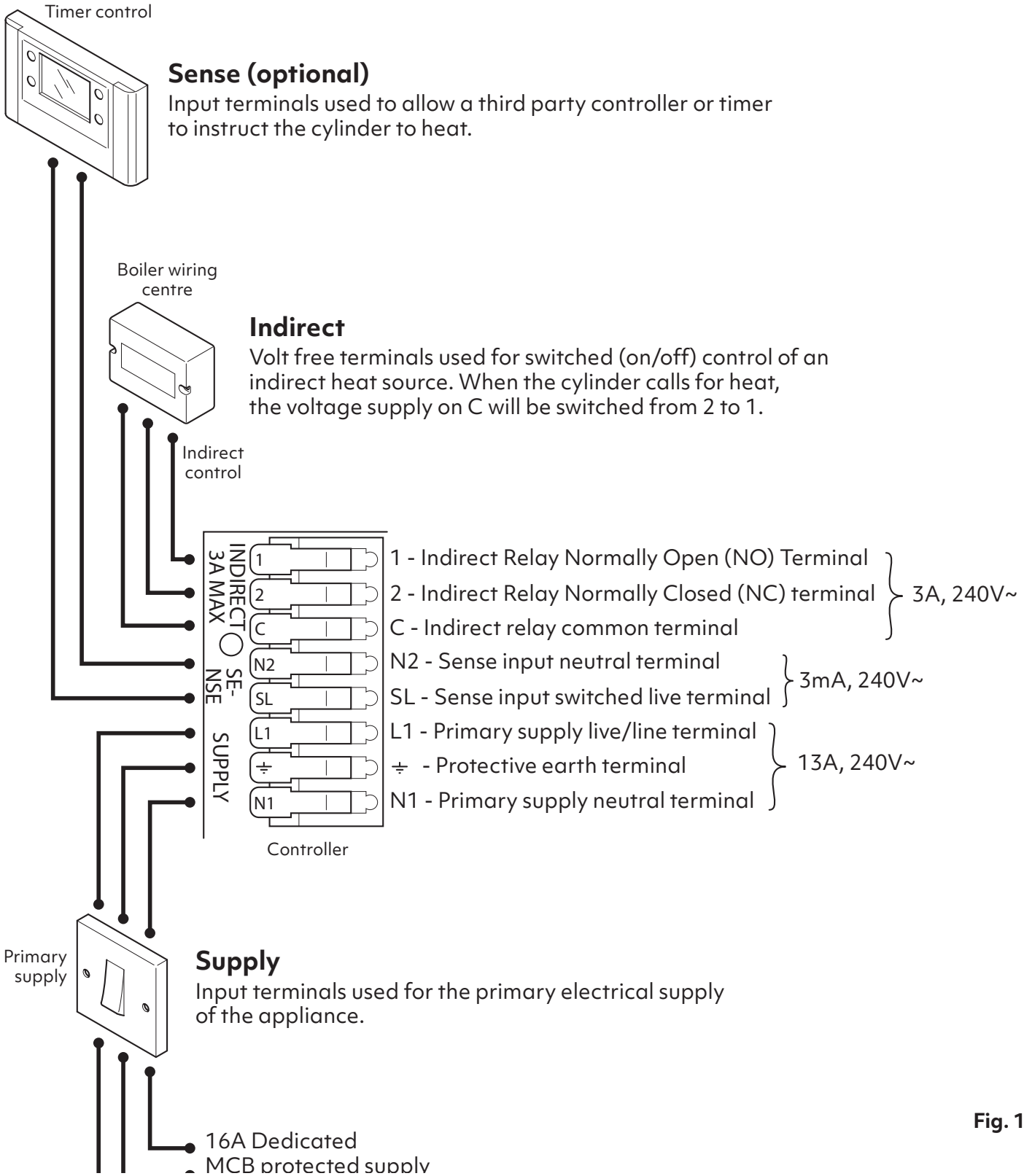

Fig. 19

12.0 Installation: electrical

12.7 Wiring diagram - Direct

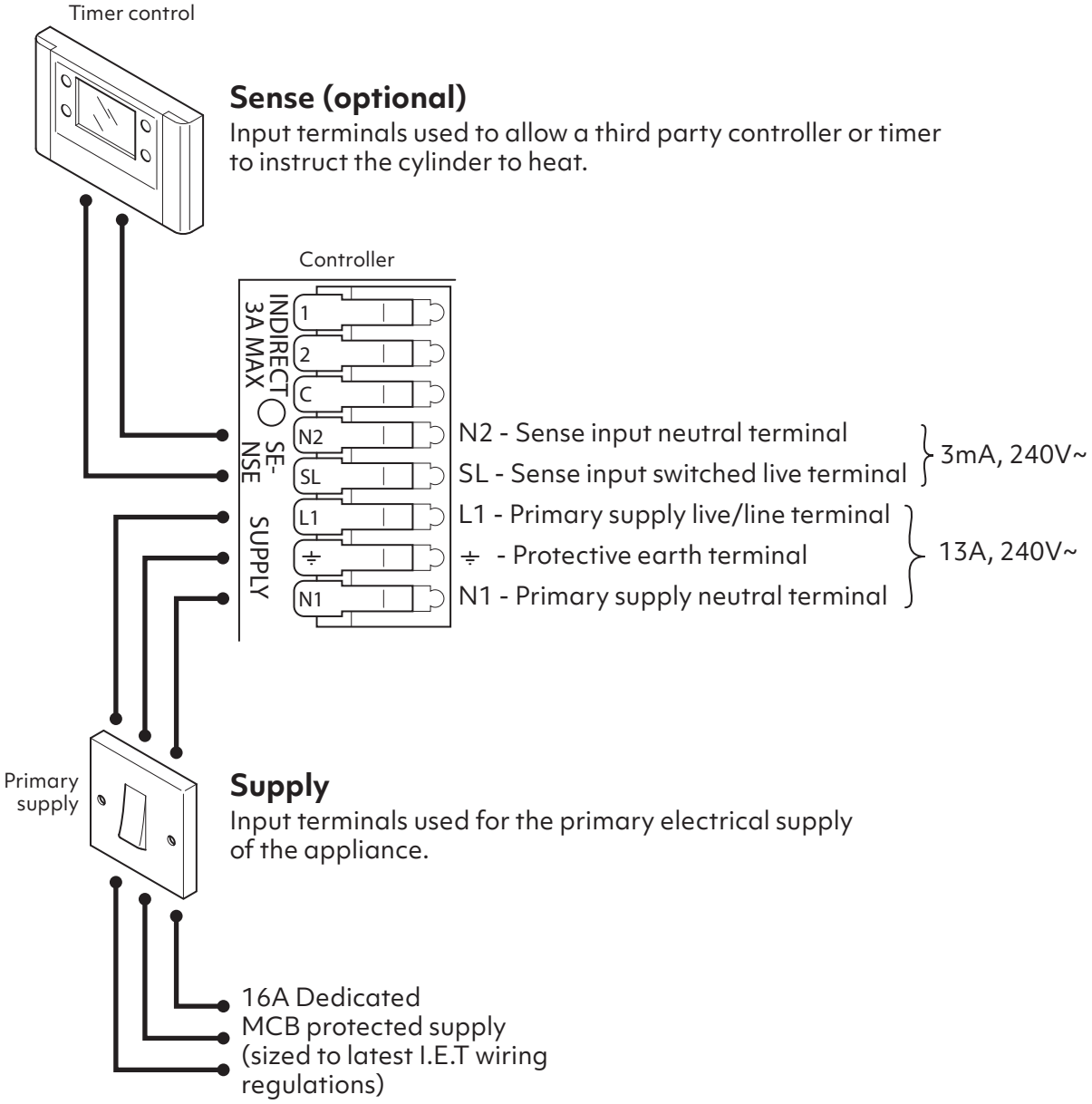

Fig. 20

13.0 Installation: connectivity

13.1 Connectivity

The Mixergy cylinder delivers the best experience when the controller is connected to the internet. A connection lets the homeowner or resident use the Mixergy app to:

- Set and optimise hot water schedules
- Use smart tariffs where available
- Control hot water from anywhere
- Unlock additional savings

Set up the controller to match the property's connectivity options. The resident can then create an account and connect the controller to the Mixergy app.

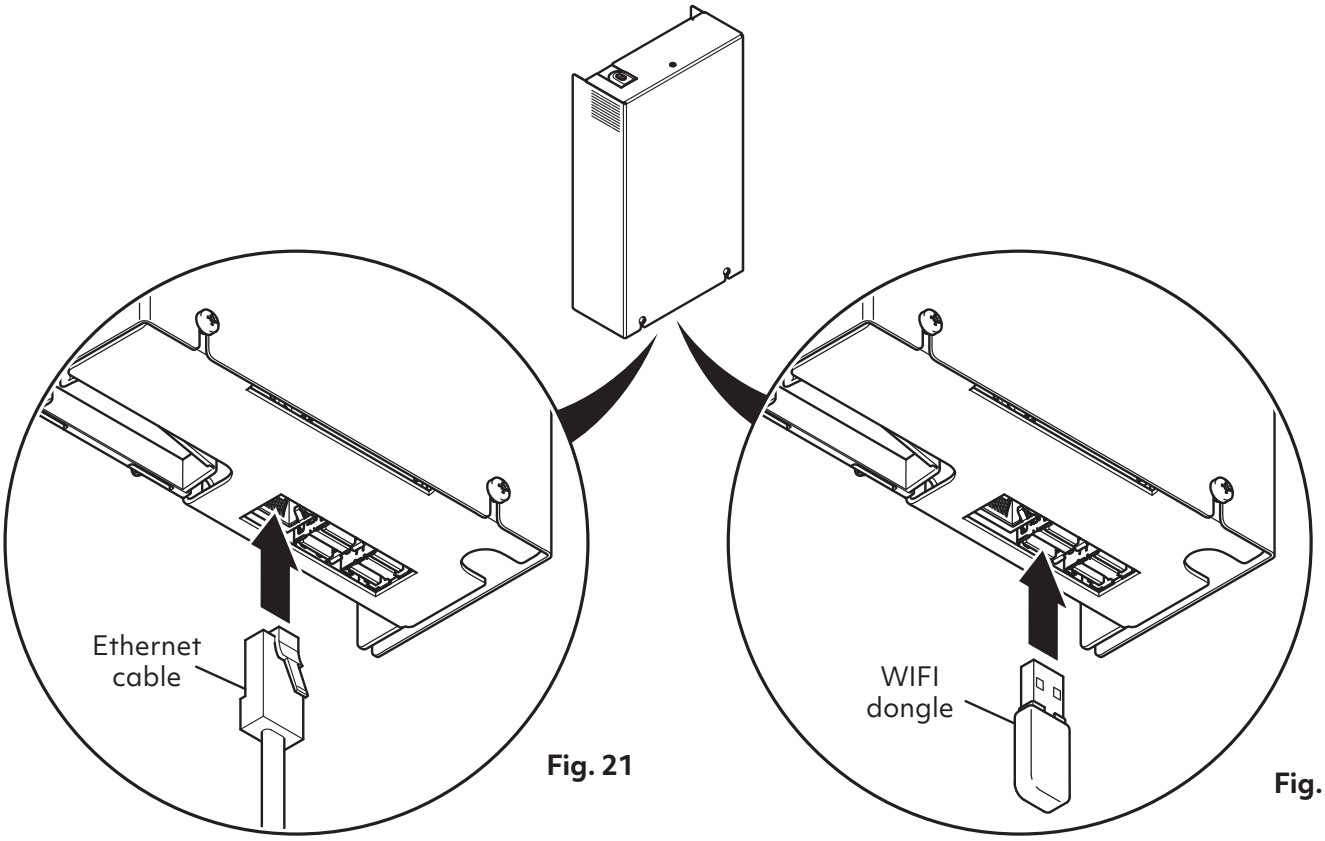

Fig. 21

Fig. 22

Option 1: Hardwired connection (Ethernet)
Plug an Ethernet cable into the controller's network port. (Fig. 21).

Option 2: No hardwired connection (WiFi via dongle)
If the property does not have a hardwired connection, plug the supplied WiFi dongle into one of the controller's USB ports (Fig. 22).

13.2 Supporting a homeowner or resident at set up

If you are helping a homeowner or resident get set up, ask them to download the Mixergy app and follow the in-app steps.

If the WiFi signal is weak at the controller, use the supplied 2m USB extension cable to reposition the dongle and test again.

For more detail, refer to the User Guide in the box or visit support.mixergy.co.uk.

14.0 Commissioning

DO NOT SWITCH THE SYSTEM ON UNLESS THE CYLINDER IS COMPLETELY FILLED WITH WATER.

All factory fitted valves etc. are fitted using a thread sealant. If this seal is broken it should be re-sealed using a suitable sealant. It is the installer's responsibility to ensure all the connections are water tight prior to leaving the property.

1. Ensure the drain on the cold feed pipework is closed.

2. Open a hot tap the furthest distance from the unit.

3. Gradually open the cold mains isolator valve and fill cylinder until water appears at the hot tap. Attend to each hot water outlet in turn and ensure water flow is obtained at each outlet expelling any air within the pipework.

4. To ensure the safety valves are operating correctly, turn the tops of the valves independently to ensure water passes through the valve and into the tundish. Once this is confirmed, open both valves together allowing as much water as possible to flow through the tundish. At this point make sure that your discharge pipework is free from debris and is transporting the water away to waste effectively. The valves can then be released and a check should be made to ensure they have re-seated correctly.

5. Switch on the Mixergy cylinder and check for correct operation. **Mixergy cylinders come supplied in 'eco mode'. Pressing any button on the gauge twice will exit eco mode.**

On power up the tank controller runs a series of tests and displays the results on the gauge.

Note that this will only run when the main controller has booted up which takes approximately 50 seconds.

Check that no LEDs light red and that the bottom seven LEDs light green.

Fig. 23 shows the meaning of each LED.

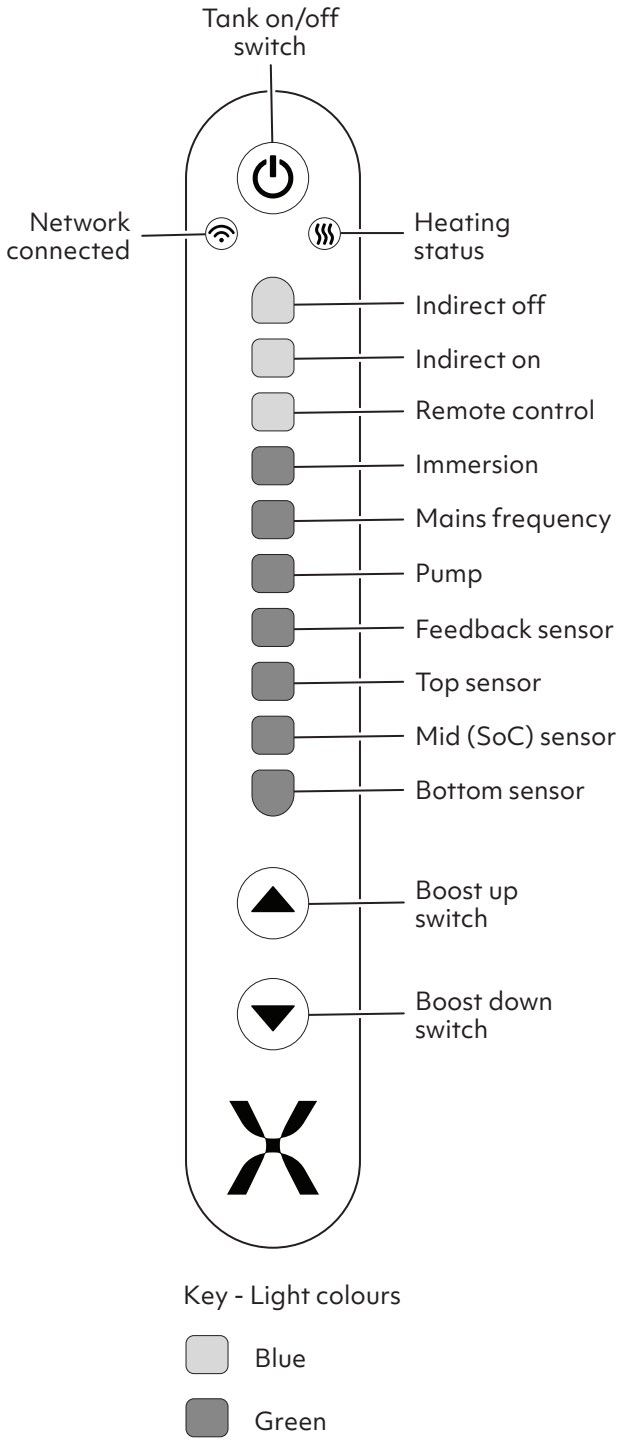

Fig. 23

14.0 Commissioning

Note that if a voltage is applied to the Remote Control input the Remote Control LED will light green rather than blue.

Check that all buttons (boost UP, boost DOWN and power) work correctly.

Ensure the cylinder's gauge illuminates and all buttons (boost UP, boost DOWN and power) work correctly.

For more detailed guidance on gauge operation, please visit support.mixergy.co.uk

14.1 Access the controller

Access to the electronics can be made by loosening the two screws at the bottom of the controller and lifting up on the lid (Fig. 24).

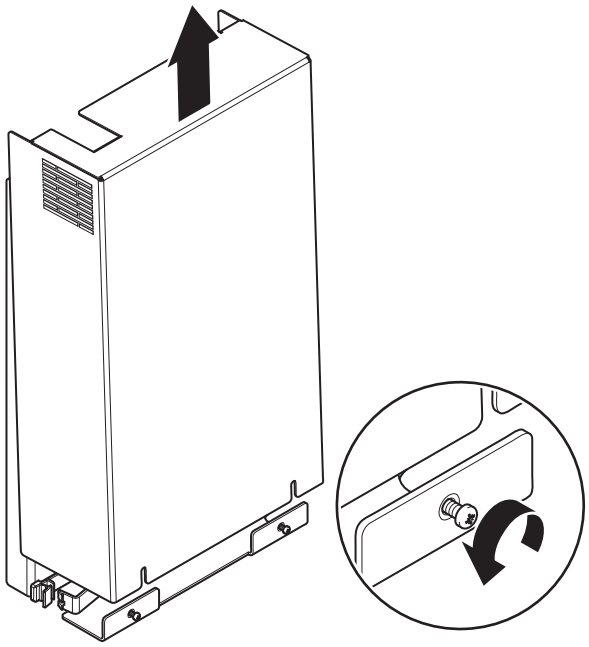

Fig. 24

14.2 Connect peripherals

Peripheral devices (such as the included gauge, PV diverter etc.) can be connected to the smart controller by plugging into the RJ-45 ports labelled 'zoneBUS'.

For specific installation instructions on devices other than the gauge, please refer to the installation manual included with that device.

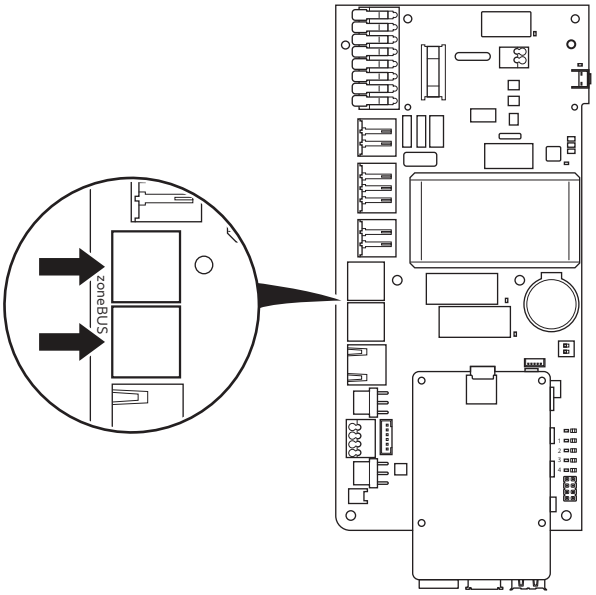

Fig. 25

14.0 Commissioning

14.3 Power and check status

Check status LEDs on the controller PCB. If any fault codes are lit, refer to the 'Fault code table' on page 34. Allow for 5 minutes of on time to ensure any pending firmware updates are completed before turning the controller off.

When the smart controller is first turned on, fault code 1 may appear for a short duration during the controller's boot sequence.

If fault code 2 is present (firmware update in progress), do not switch the controller off.

LED label	Location	Ideal state	Description
RELAY ON	1	ON (Green)/OFF	Indicates an indirect call for heat is active
STAT	2	OFF	Indicates indirect stat has tripped, press button to reset
PWR ON	3	ON (Green)	Indicates all power rails good on the control board
RELAY ON	4	ON (Green)/OFF	Indicates immersion output set to 'HEATER2'
RELAY ON	5	ON (Green)/OFF	Indicates immersion output on for either HEATER1 or HEATER 2
COM	6	Flashing (Green)	Indicates communication between SBC and controller
FAULT	7	OFF	Refer to "Fault code table" on page 34

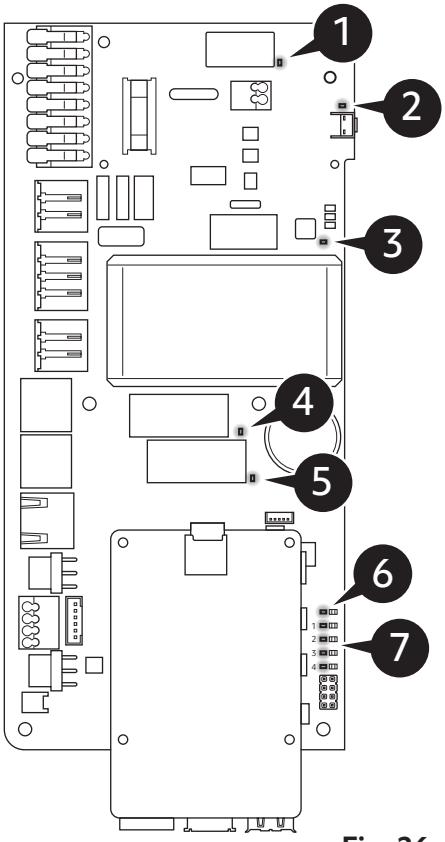

Fig. 26

14.0 Commissioning

14.4 Changing heat sources

All Mixergy systems leave the factory in direct (electric) operation. In the case of a heat pump or indirect (boiler) installation, the cylinder's primary heat source must be switched to their relevant setting to allow for operation of the 2 port valve and boiler or heat pump.

During commissioning, the primary heat source can be set by holding the boost UP and DOWN buttons simultaneously (1). The display will illuminate white to acknowledge that you have entered this mode. To change the heat source, let go of the buttons once any of the display LEDs have changed to the required colour (BLUE for direct, RED for indirect, GREEN for heat pump). The display will then flash either blue, red or green to indicate the new default heat source (2). Switch the cylinder off and on (power cycle) for the change to take effect.

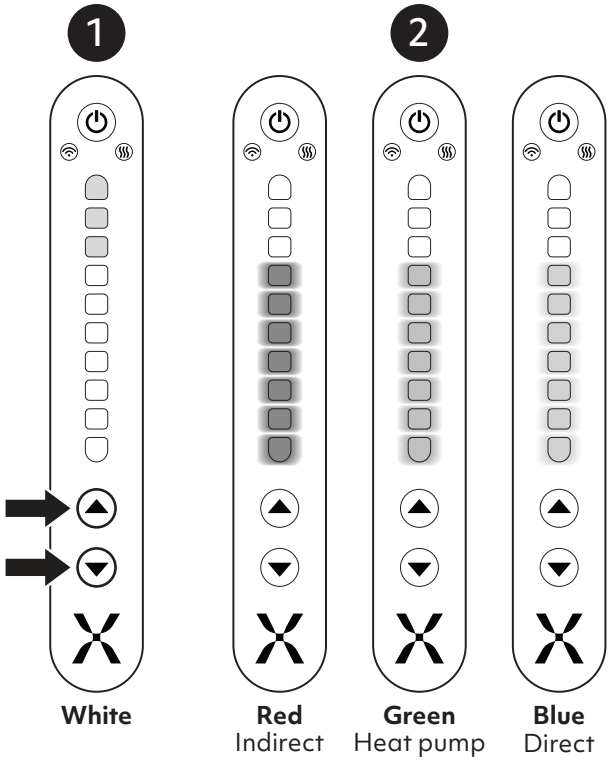

Fig. 27

Please note that any heat source that is set while the cylinder is offline will be overwritten once the cylinder establishes an internet connection, please ensure that the default heat source is set correctly on the app once the system is fully connected.

14.5 Self-test troubleshooting

Sensor
If any of the 4 sensor results (bottom, charge, top and feedback) show a red LED, double check that the 'CYL SENSOR' is correctly plugged in and the cylinder is within a safe temperature range (between 5 °C and 65 °C.) Try unplugging and plugging the sensor. If the problem persists.
Mains measurement
Double check the incoming supply connection. If the fault persists.
Pump
Check that the cylinder's circulator pump cable is plugged into the 'PUMP 1' header. Check the pump is correctly plugged into the pump cable extension. If the problem persists.
Immersion heater
Check that the cylinder's immersion heater is plugged into the 'HEATER 1' header. Check that the immersion thermostat is set to the maximum value. Ensure the cylinder is not over-heated (>65 °C.) If a PV diverter is fitted, ensure it is plugged into the zoneBUS network of the controller. If the diverter has not been factory fitted, 'device discovery' may need to be run via the app in order to configure the PV diverter. If the problem persists.
Remote control, Indirect on/off
Check that a blue LED is shown. If a remote control signal is present, the remote control LED should light green. If any of these faults persist, go to support.mixergy.co.uk

14.6 Replace lid

Once commissioning is complete, power off the controller, replace the lid and switch the controller back on.

14.0 Commissioning

14.7 Commissioning checklist

This Commissioning Checklist is to be completed in full (either in this booklet or on the side of the cylinder) by the competent person who commissioned the cylinder as a means of demonstrating compliance with the appropriate Building Regulations.

Failure to install and commission this equipment to the manufacturer's instructions may invalidate the warranty but does not affect statutory rights.

Please ensure all information is filled in correctly below.

Customer name:		Telephone No:	
Address:			
Cylinder model:			
Cylinder serial no:		Date:	
Commissioned by: (Print name)		G3 Certificate No:	
Company name:		Telephone No:	
Company address:			

ALL SYSTEMS				
What is the incoming static cold-water pressure at the inlet to the system?	bar			
Has the strainer been cleaned of installation debris?	Yes		No	
Is the installation in a hard water area (above 200ppm)?	Yes		No	
If yes, has a scale reducer been fitted?	Yes		No	
What type of scale reducer has been fitted?				
What is the hot water temperature set to?	°C			
What is the maximum hot water flow rate (measured at high flow outlet)?	min			
Time & temperature controls have been fitted in compliance with Part L of the Building Regulations?	Yes			
Is the cylinder renewable compatible?	Yes		No	
What is the hot water temperature at the nearest outlet?	°C			
All appropriate pipes have been lagged up to 1m or at the point they become concealed?	Yes			

14.0 Commissioning

UNVENTED SYSTEMS ONLY				
Where is the pressure reducing valve located?				
What is the pressure reducing valve setting?				Bar
Has a combined temperature & pressure relief valve and expansion valve been fitted, and discharge tested?	Yes		No	
The tundish & discharge pipework have been connected and terminated to Part G Building Regulations?	Yes		No	
Are all energy sources fitted with a cut-out device?	Yes		No	
Has the expansion vessel been checked?	Yes		No	

ALL INSTALLATIONS		
The hot water system complies with the appropriate Building Regulations	Yes	
The system has been installed in accordance with the manufacturer's instructions	Yes	
The system has been commissioned in accordance with the manufacturer's instructions	Yes	
The system controls have been demonstrated to and understood by the customer	Yes	
The cylinder is ready to be connected to the internet and account registered	Yes	
The manufacturer's literature has been explained and left with the customer	Yes	
Building Regulations Notification Number (if applicable)		
To be completed by the customer on receipt of a Building Compliance Certificate*		
Commissioning Engineer's Signature		
Customer's signature (to confirm satisfactory demonstration & receipt of manufacturer's literature)		

* All installations in England and Wales must be notified to Local Authority Building Control (LABC) either directly or through a Competent Persons Scheme. A Building Regulation Compliance Certificate will then be issued to the customer.

15.0 Problem solving

Discharge from either of the relief valves indicates a malfunction in the system and must be investigated immediately.

15.1 Overheated water

In the unlikely event of overheated (95°C) water being discharged, the Mixergy controller should be switched off immediately and a competent engineer called out. Please contact your original installer or contact Mixergy directly if your product is under warranty.

Do not shut off the cold water supply to the unit.

15.2 Water discharge

If water is occasionally being discharged during heating, this likely indicates that the Expansion Vessel needs to be recharged. In the event of this occurring, switch off all power supplies to the cylinder, and re-charge the vessel. If water is continually being discharged, firstly check with a gauge that the pressure allowed through the PRV does not exceed 3 bar. Should a replacement be required then only one supplied by Mixergy should be used.

15.3 Electrical fault

If an electrical fault of the controller is suspected or the electrical system does not operate as expected, please visit support.mixergy.co.uk for further guidance.

15.4 Connectivity issues

If a connectivity issue is suspected, please visit support.mixergy.co.uk for further guidance.

15.5 Expansion vessel check and re-charging

Check pressure via the Schrader valve on top of the vessel which is situated under the removable plastic cap. The vessel can be checked and recharged by switching off the stopcock or isolating the water supply to the cylinder, then opening a hot tap to deplete the pressure inside the cylinder. Unscrew the black plastic cap on the expansion vessel to reveal the Schrader valve, with the aid of a pressure gauge ensure the pressure reads 3.0 bar. If there is insufficient pressure within the vessel, top up the vessel via a pump and recharge to 3.0 bar.

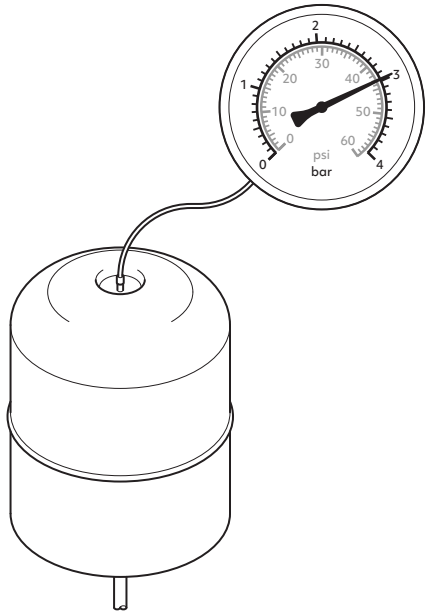

Fig. 28

15.6 Safety valves

If all previous checks have been done and water is still being discharged from either safety valve, determined which valve is faulty and replace with one supplied by Mixergy.

15.0 Problem solving

15.7 Fault code table

Do not switch off power to the system if a firmware upgrade (code 2) is in progress.

LED code				Fault code	Fault description	Fault condition
1	2	3	4			
▭				1	No comms from SBC	No comms received by cylinder MCU for >2 seconds
	▭			2	Firmware update active	Firmware update currently in progress
▭	▭			3	Cylinder sensor problem	Any thermocline sensor readings out of bounds
		▭		4	Energy measurement issue	Unable to get energy readings from chip
▭		▭		5	Heater 1 issue	Energy flow out of bounds when heater 1 is turned on
	▭	▭		6	Heater 2 issue	Energy flow out of bounds when heater 2 is turned on
▭	▭	▭		7	PV diverter not responding	No comms from PV diverter for >2 seconds
			▭	8	Current sensor problem	No comms from EMC/ Current interface
▭			▭	9	Ambient sensor issue	Ambient sensor reading out of bounds
	▭		▭	10	S1 issue	Sensor1 reading out of bounds
▭	▭		▭	11	S2 issue	Sensor2 reading out of bounds
		▭	▭	12	Pump1 issue	Energy flow out of bounds when pump1 is turned on
▭		▭	▭	13	Pump2 issue	Energy flow out of bounds when pump2 is turned on
	▭	▭	▭	14	Reserved	
▭	▭	▭	▭	15	Reserved	

Faults highlighted in grey are configuration specific and do not apply to standard direct/ indirect systems. If you are unable to rectify any fault yourself, please contact Mixergy directly and quote the fault code on the table above.

15.0 Problem solving

15.8 No PWR ON LED

If the PWR ON LED is not lit, this indicates an issue with the unit's power supply. Double check the incoming supply & check fuse F1 for continuity. If the fuse has failed, it is recommended to first disconnect and check the immersion heater(s) for faults before replacing the fuse.

15.9 STAT LED on/stuck on

If the STAT LED is solid red, this indicates a fault condition with the electronic thermostat. If the cylinder is in a safe condition (<70 °C), press the stat reset button on the right side of the controller. If the issue persists, double check the cylinder sensor is plugged in properly. If the installation is indirect, check that the cylinder 2-port valve is free to move and not stuck in the open position.

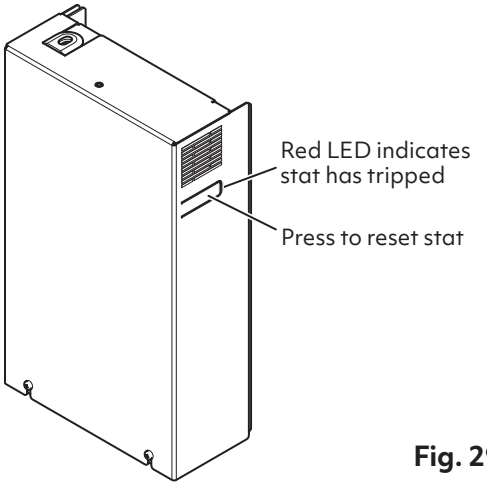

Fig. 29

16.0 Draining the cylinder

1. Switch off the immersion heater(s), boiler and any other heat sources.
2. Switch off water at mains.
3. Open nearest hot tap.
4. Open drain to start draining the cylinder.

To re-fill follow the commissioning instructions.

16.1 Flushing the cylinder

To flush out the system, drain the unit as above, fill and repeat.
If after recharging the expansion vessel the cylinder is still discharging, it may be due to cross-flow - ensure appropriate check valves are fitted. The pressure reducing valve, one of the relief valves, or the expansion vessel may have failed. The component should be identified and replaced by one supplied by Mixergy.

17.0 Replacement parts

Do not attempt to repair or replace any parts of the Mixergy cylinder unless you are a trained operative. If you suspect a fault or a replacement part is needed, please visit: support.mixergy.co.uk

To determine the correct parts for your system, please ensure you have your cylinder MX number which can be found on the nameplate located at the front of the cylinder.

Model code	MX-180-ELE-EXT-550-1-1-A
Total weight	227 kg (wet), 54 kg (dry)
Immersion heater rating	230-240 V~ 2.7-3.0 kW
Immersion heater type	1 ¾" BSP – 400mm Incoloy
Standing heat loss/24 hr	1.8 kWh
Heat exchanger rating	-- kW
Max. supply pressure	1 MPa (10 bar)
Expansion relief pressure	0.6 MPa (6 bar)
Max. operating pressure	0.55 MPa (5.5 bar)
Max. coil pressure	0.35 MPa (3.3 bar)

MX000000
Scan the QR code to add your tank to your account or visit www.mixergy.io/register
mixdevice-aaaaa-bbbbb-ccccc-ddddd-eeeee

Fig. 30

17.0 Replacement parts

Part description	Part number
Immersion stat 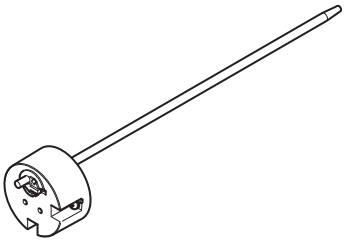	MEL0018
Pump assembly	MAS0265
Controller 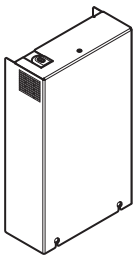	MAS0191
Gauge 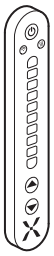	MAS0043
2-port valve 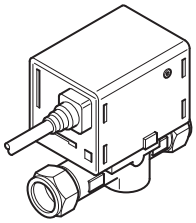	MEL0023

18.0 Guide to safe isolation

A Mixergy cylinder may have more than one incoming main electrical supply and point of isolation.

All of which must be “Proven Dead” before commencing work.

Primary supply: 16A MCB protected circuit with a 20A DP switch

Indirect control: 3A fuse spur

Timer control: 3A or 13A fuse spur

All of which must be isolated and locked-off before testing.

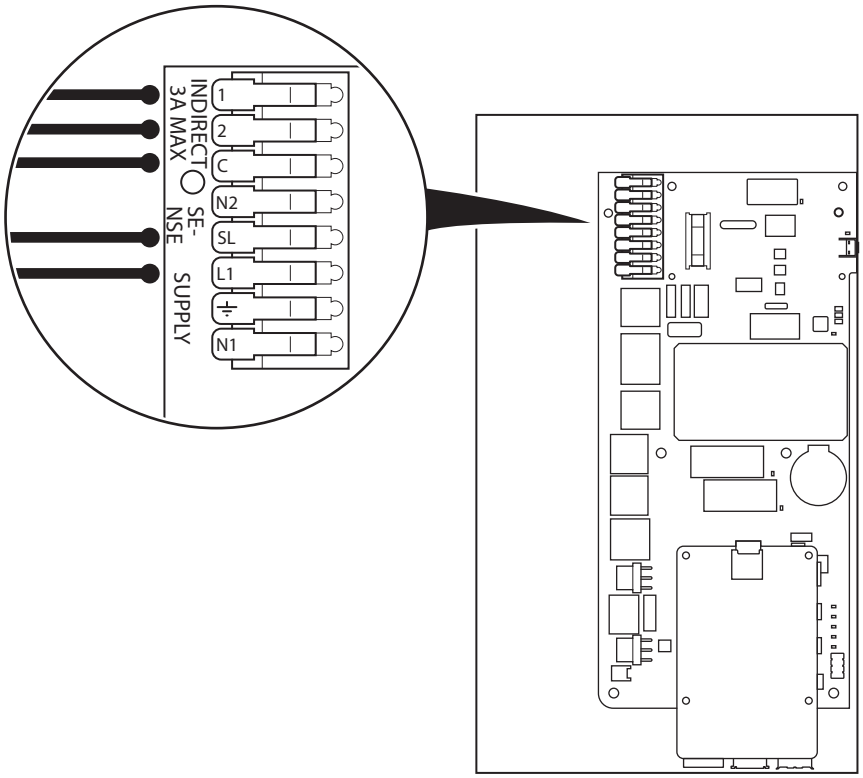

Fig. 31

For more information on safe isolation see www.electricalsafetyfirst.org.uk and search best practice.

19.0 Servicing and maintenance

ANNUAL MAINTENANCE should be performed by a competent operative.

A maintenance record should be kept on the service record on page 35 of this booklet.

19.1 Annual service checks

- **Expansion relief valve** - manually open the twist cap and check that the water is discharged and runs clearly through the Tundish and out at the final discharge point. Ensure that the valve re-seats/re-seals itself.

- **Pressure & temperature relief valve** - repeat the above procedure. Ensure that the valve re-seats/re-seals itself.

- **Strainer** - turn off mains at stopcock. There will be a small amount of residual water in the pipework, remove the cartridge from Pressure Reducing Valve, clean Strainer and replace.

- **Expansion vessel** - check pressure via the valve on top of the vessel which is located under the plastic cap. Ensure pressure is 3 Bar. Vessel can be recharged if required as per 'Expansion vessel check and re-charging' on page 33.

19.2 Disassociating an account

If a new user is moving into the property and the user of the account tied to the cylinder needs to be changed, the new user will have to disassociate the cylinder from the existing account before registering. This can be performed by pressing and holding the boost down and power buttons for approximately 15 seconds.
For more information go to support.mixergy.co.uk.

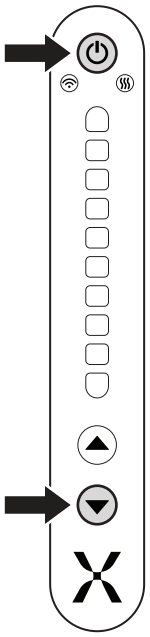

Fig. 32

20.0 Service Record

It is recommended that your hot water system is serviced regularly and that the appropriate service record is completed.

Before completing the service record below, please ensure you have completed the service in accordance with the manufacturer's instructions.

Service No.1	Date		**Service No.2**	Date	
Engineer name			Engineer name		
Company name			Company name		
Telephone No.			Telephone No.		
Email address			Email address		
Comments			Comments		
Signature			Signature		
Service No.3	Date		**Service No.4**	Date	
Engineer name			Engineer name		
Company name			Company name		
Telephone No.			Telephone No.		
Email address			Email address		
Comments			Comments		
Signature			Signature		

20.0 Service Record

Service No.5	Date	
Engineer name		
Company name		
Telephone No.		
Email address		
Comments		
Signature		

Service No.6	Date	
Engineer name		
Company name		
Telephone No.		
Email address		
Comments		
Signature		

Service No.7	Date	
Engineer name		
Company name		
Telephone No.		
Email address		
Comments		
Signature		

Service No.8	Date	
Engineer name		
Company name		
Telephone No.		
Email address		
Comments		
Signature		

Service No.9	Date	
Engineer name		
Company name		
Telephone No.		
Email address		
Comments		
Signature		

Service No.10	Date	
Engineer name		
Company name		
Telephone No.		
Email address		
Comments		
Signature		

20.0 Service Record

Service No.11	Date	
Engineer name		
Company name		
Telephone No.		
Email address		
Comments		
Signature		

Service No.12	Date	
Engineer name		
Company name		
Telephone No.		
Email address		
Comments		
Signature		

Service No.13	Date	
Engineer name		
Company name		
Telephone No.		
Email address		
Comments		
Signature		

Service No.14	Date	
Engineer name		
Company name		
Telephone No.		
Email address		
Comments		
Signature		

Service No.15	Date	
Engineer name		
Company name		
Telephone No.		
Email address		
Comments		
Signature		

Service No.16	Date	
Engineer name		
Company name		
Telephone No.		
Email address		
Comments		
Signature		

20.0 Service Record

Service No.17	Date	
Engineer name		
Company name		
Telephone No.		
Email address		
Comments		
Signature		

Service No.18	Date	
Engineer name		
Company name		
Telephone No.		
Email address		
Comments		
Signature		

Service No.19	Date	
Engineer name		
Company name		
Telephone No.		
Email address		
Comments		
Signature		

Service No.20	Date	
Engineer name		
Company name		
Telephone No.		
Email address		
Comments		
Signature		

Service No.21	Date	
Engineer name		
Company name		
Telephone No.		
Email address		
Comments		
Signature		

Service No.22	Date	
Engineer name		
Company name		
Telephone No.		
Email address		
Comments		
Signature		

20.0 Service Record

Service No.23	Date	
Engineer name		
Company name		
Telephone No.		
Email address		
Comments		
Signature		

Service No.24	Date	
Engineer name		
Company name		
Telephone No.		
Email address		
Comments		
Signature		

Service No.25	Date	
Engineer name		
Company name		
Telephone No.		
Email address		
Comments		
Signature		

Service No.26	Date	
Engineer name		
Company name		
Telephone No.		
Email address		
Comments		
Signature		

Service No.27	Date	
Engineer name		
Company name		
Telephone No.		
Email address		
Comments		
Signature		

Service No.28	Date	
Engineer name		
Company name		
Telephone No.		
Email address		
Comments		
Signature		

For further guidance and troubleshooting
visit **support.mixergy.co.uk**

mixergy®

www.mixergy.co.uk

Mixergy Ltd, 2 Canal View, Wharf Farm,
Eynsham Road, Cassington, Oxfordshire OX29 4DB

Issue 4 10/26 MDC0046-04